" Coherent Raman scattering microscopy is widely regarded as a powerful tool for solving biomedical problems due to its chemical specificity" label-free imaging capability" high spectral resolution and high sensitivity. However" the clinical application of coherent Raman scattering imaging technology has long been hindered by environmental sensitivity and large volume solid-state lasers. Ultrafast fiber lasers" with their compactness and stability" can effectively overcome these shortcomings. In this paper" different realization methods and research progress of fiber-based laser sources in coherent Raman scattering imaging are reviewed" including supercontinuum fiber source" soliton self-frequency shift fiber source" fiber optical parametric oscillator and synchronized fiber source" and the future development is prospected.

" nonlinear optics" fiber-based laser sources" coherent Raman scattering imaging" supercontinuum" soliton self-frequency shift" fiber optical parametric oscillator" synchronization technique

“ “ “ “ “ “ “ “ “

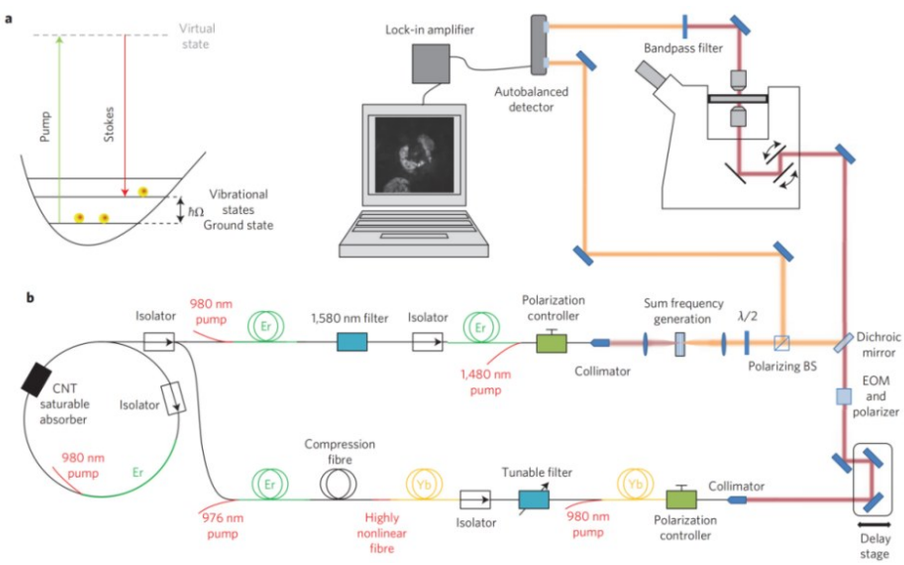
a
Virtual state
Pump
Stokes
Vibrational states
ħΩ
Ground state
Lock-in amplifier
Autobalanced detector
Bandpass filter
b
Isolator
980 nm pump
Er
1,580 nm filter
Isolator
Er
Polarization controller
Sum frequency generation
λ/2
Dichroic mirror
1,480 nm pump
Collimator
Polarizing BS
EOM and polarizer
CNT saturable absorber
Isolator
980 nm pump
Er
Compression fibre
Er
Yb
Tunable filter
Yb
Collimator
976 nm pump
Highly nonlinear fibre
Isolator
980 nm pump
Polarization controller
Delay stage

“ 1“ “ “ “ “ “ “ “ “ “ “ “ SRS“ “ “ “ “ “ “ “ “ “ “ “ a“ SRS“ “ “ “ “ “ “ “ “ “ “ “ “ “ “ “ “ “ “ “

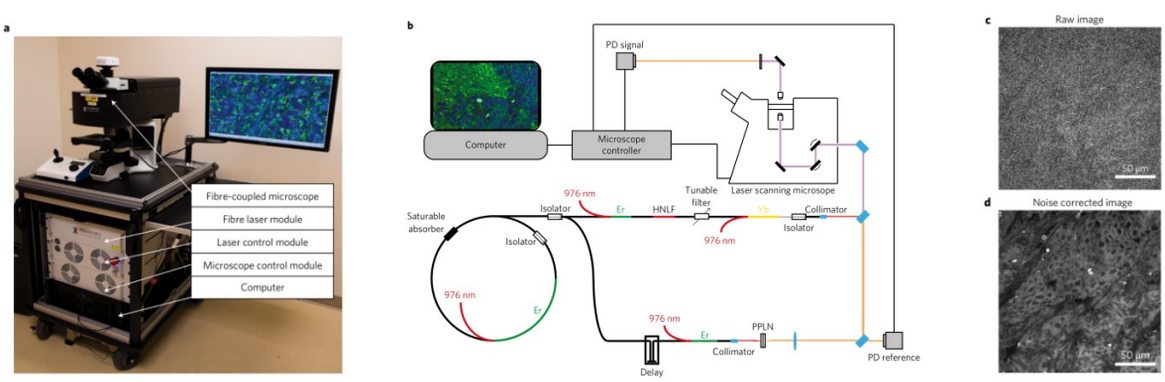

“ 2“ “ “ “ “ “ “ “ “ “ “ “ SRS“ “ “ “(a)“ “ “ “ SRS“ “ “ “(b)“ “ “ “ “ “ “ “ SRS“ “ “ “ “ “ “ “ “ “ “ “

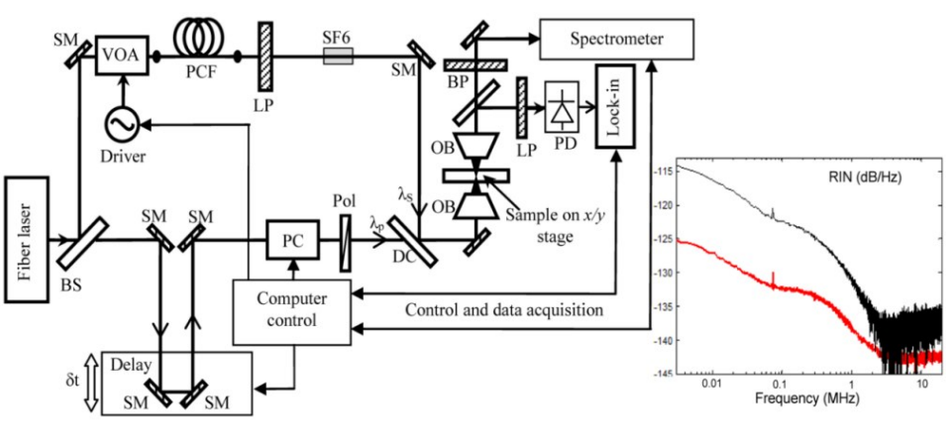

Fig. 3: Multimodal label-free imaging system with controllable Stokes wavelength (P_P) and relative pump delay (δt). BS: beam splitter; SM: silver mirror; PCF: photonic crystal fiber; LP: long-pass filter; BP: bandpass filter; SF6: SF-6 glasses rod; DC: dichroic beam combiner; OB: objective lenses; PC: pockels cell; Pol: polarizer; PD: photodiode. Inset on the right: measured relative intensity noise of the fiber laser (red) and of the soliton self-frequency shifted pulses (black).

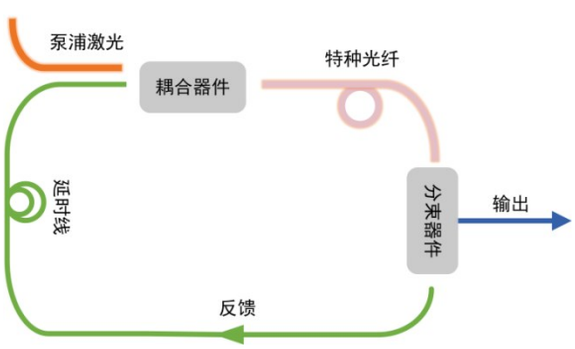

“ 4“ “ “ CRS“ “ “ FOPO

Fig. 4“ FOPO for CRS Imaging

“ “ “ “

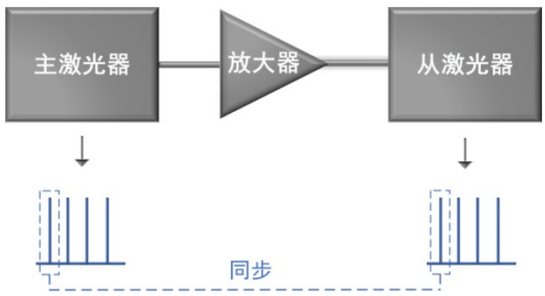

“ 6“ “ “ “ “ “ “ “ “ “

Fig. 6“ Schematic of the passive synchronization system

“ “ “ “ “ “ “ “ “ “

“ “ “ “ “ “ “ “ “ “ “ “ “ “ “ “ “ “ “ “

“ “ “ “ “	“ “ “ “ “ “ “	“ “	“ “
“ “ “ “ “ “ “ “ “ “ “ “ “	“ “ “ “ “ “ “ “ “ “	“ “ “ “ “ “ “	“ “ “ “ “ “ “ “ “ “ “ “ “

“ “ “ “ “ “ “ “ “ “ “ “ “ “ “ “ “ “ “ “

“ “ “ “
“ “ “ “ “
“ “
“ “ “ “ “ “ “ “ “
“ “ “ “
“ “ “ “ “ “ “ “
“ “
“ “ “ “ “ “

“ “ “ “ “ “ “ “ “ “ “ “ “ “ “ “ “ “ “ “